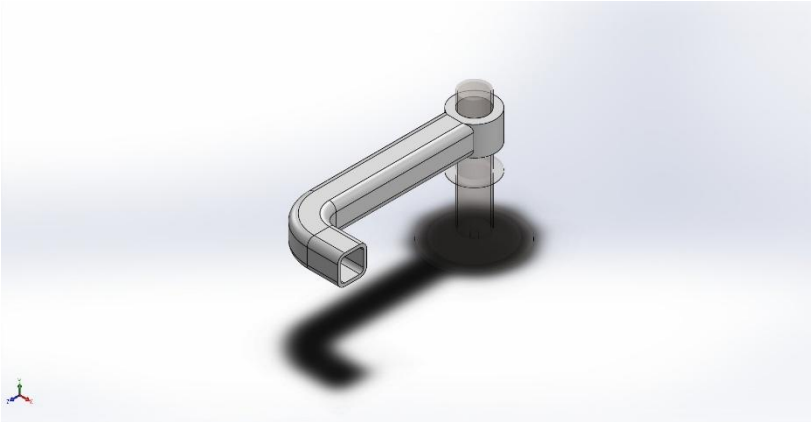

Simulation of Contact

Date: April 28, 2026
Designer: Remy
Study name: Nonlinear 1
Analysis type: Nonlinear - Dynamic

Table of Contents

Description 1
Assumptions 2
Model Information 2
Study Properties 3
Units 4
Material Properties 4
Loads and Fixtures 5
Connector Definitions 6
Interaction Information 6
Mesh information 7
Sensor Details 9
Resultant Forces 9
Beams 9
Study Results 10
Conclusion 14

Description

No Data

Assumptions

Model Information

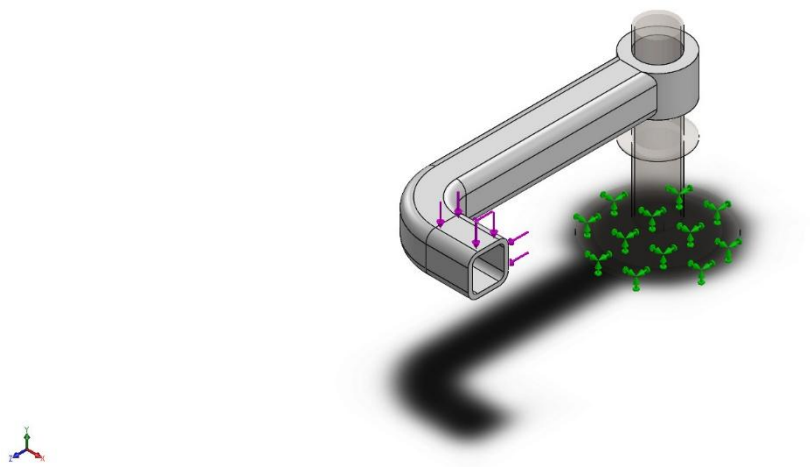

Model name: Contact
Current Configuration: Default

Solid Bodies

Document Name and Reference	Treated As	Volumetric Properties	Document Path/Date Modified
Imported1	Solid Body	**Mass:1.75994 kg** **Volume:0.000228563 m^3** **Density:7,700 kg/m^3** **Weight:17.2474 N**	**C:\Users\26869\Desktop\game\Solidwork\resource\model\第 61 课\Metal.SLDPRT**
Imported1	Solid Body	**Mass:0.401324 kg** **Volume:0.000393455 m^3** **Density:1,020 kg/m^3** **Weight:3.93297 N**	**C:\Users\26869\Desktop\game\Solidwork\resource\model\第 61 课\Rubber-1.SLDPRT**

Study Properties

Study name	Nonlinear 1
Analysis type	Nonlinear - Dynamic
Mesh type	Solid Mesh
Start time	0 Seconds
End time	0.08 Seconds
Time increment	Auto stepping
Compute free body forces	Off
Contact penalty stiffness scale factor	1
Large displacement formulation:	On
Update load direction with deflection:	Off
Large strain formulation:	Off
Save data for restarting the analysis	Off
Thermal Effect:	On
Thermal option	Include temperature loads
Zero strain temperature	298 Kelvin
Solver type	Large Problem Direct Sparse
Incompatible bonding options	Simplified
Control technique:	Force
Iterative technique:	NR(Newton-Raphson)
Integration Method	Newmark
Result folder	SOLIDWORKS document (C:\Users\26869\Desktop\game\Solidwork\resource\model\第 61 课)

Units

Unit system:	SI (MKS)
Length/Displacement	mm
Temperature	Kelvin
Angular velocity	Rad/sec
Pressure/Stress	N/m^2

Material Properties

Model Reference	Properties	Components
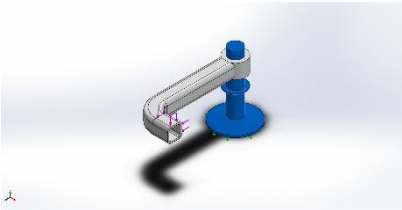	**Name:** Alloy Steel **Model type:** Linear Elastic Isotropic **Default failure criterion:** Unknown **Yield strength:** 6.20422e+08 N/m^2 **Tensile strength:** 7.23826e+08 N/m^2 **Elastic modulus:** 2.1e+11 N/m^2 **Poisson's ratio:** 0.28 **Mass density:** 7,700 kg/m^3 **Shear modulus:** 7.9e+10 N/m^2 **Thermal expansion coefficient:** 1.3e-05 /Kelvin	SolidBody 1(Imported1)(Metal-1)
Curve Data:N/A		
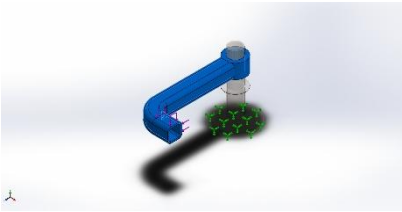	**Name:** ABS **Model type:** Plasticity - von Mises **Default failure criterion:** Unknown **Yield strength:** 3e+07 N/m^2 **Tangent modulus:** 0 N/m^2 **Elastic modulus:** 2e+09 N/m^2 **Poisson's ratio:** 0.394 **Mass density:** 1,020 kg/m^3	SolidBody 1(Imported1)(Rubber-1-1)
Curve Data:N/A		

Loads and Fixtures

Fixture name	Fixture Image	Fixture Details
Fixed-1	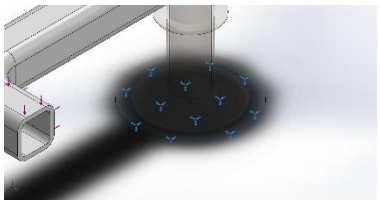	**Entities:** 1 face(s) **Type:** Fixed Geometry

Resultant Forces

Components	X	Y	Z	Resultant
Reaction force(N)	298.014	135.727	-116.037	347.417
Reaction Moment(N.m)	0	0	0	0

Symmetry-1	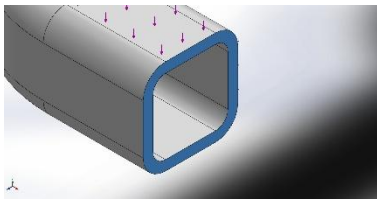	**Entities:** 1 face(s) **Type:** Symmetry

Resultant Forces

Components	X	Y	Z	Resultant
Reaction force(N)	85.7543	0	0	85.7543
Reaction Moment(N.m)	0	0	0	0

Load name	Load Image	Load Details
Force-1	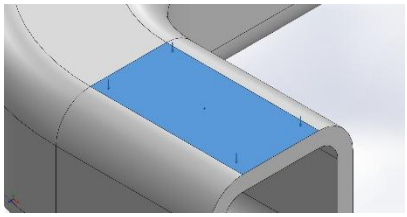	**Entities:** 1 face(s) **Type:** Apply normal force **Value:** 125 N
Force-2	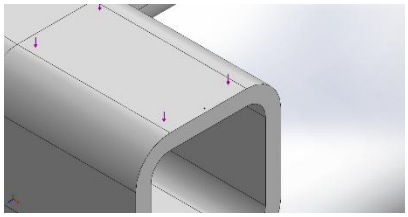	**Entities:** 1 face(s) **Type:** Apply normal force **Value:** 550 N

Connector Definitions

No Data

Interaction Information

Interaction	Interaction Image	Interaction Properties
Local Interaction-1	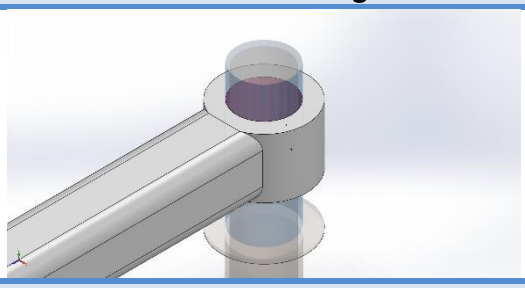	**Type:** Contact interaction pair **Entities:** 2 face(s) **Advanced:** Surface to surface

Contact/Friction force

Components	X	Y	Z	Resultant
Contact Force(N)	2.9969E-12	7.6393E-16	-2.466E-12	3.8811E-12

Local Interaction-2	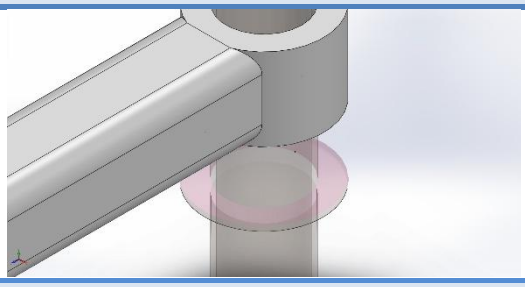	**Type:** Contact interaction pair **Entities:** 3 face(s) **Advanced:** Surface to surface	

Contact/Friction force

Components	X	Y	Z	Resultant
Contact Force(N)	-29.849	-0.015807	-132.97	136.28

Mesh information

Mesh type	Solid Mesh
Mesher Used:	Standard mesh
Automatic Transition:	Off
Include Mesh Auto Loops:	Off
Jacobian points for High quality mesh	16 Points
Element Size	9.90937 mm
Tolerance	0.495469 mm
Mesh Quality	Draft
Remesh failed parts independently	Off
Reuse mesh for identical parts in an assembly (Blended curvature-based mesher only)	Off

Mesh information - Details

Total Nodes	6065
Total Elements	18722
Maximum Aspect Ratio	32.625
% of elements with Aspect Ratio < 3	69.2
Percentage of elements with Aspect Ratio > 10	0.00534
Time to complete mesh(hh;mm;ss):	00:00:03
Computer name:	REMY

Mesh Control Information:

Mesh Control Name	Mesh Control Image	Mesh Control Details
Control-1		**Entities:** 1 face(s) **Units:** mm **Size:** 2.97281 **Ratio:** 2.97281

Control-2		**Entities:** 2 face(s) **Units:** mm **Size:** 4.95468 **Ratio:** 4.95468
Control-3		**Entities:** 1 face(s) **Units:** mm **Size:** 3.09668 **Ratio:** 3.09668

Mesh Quality Plots

Name	Type	Min	Max
Quality1	Mesh	-	-

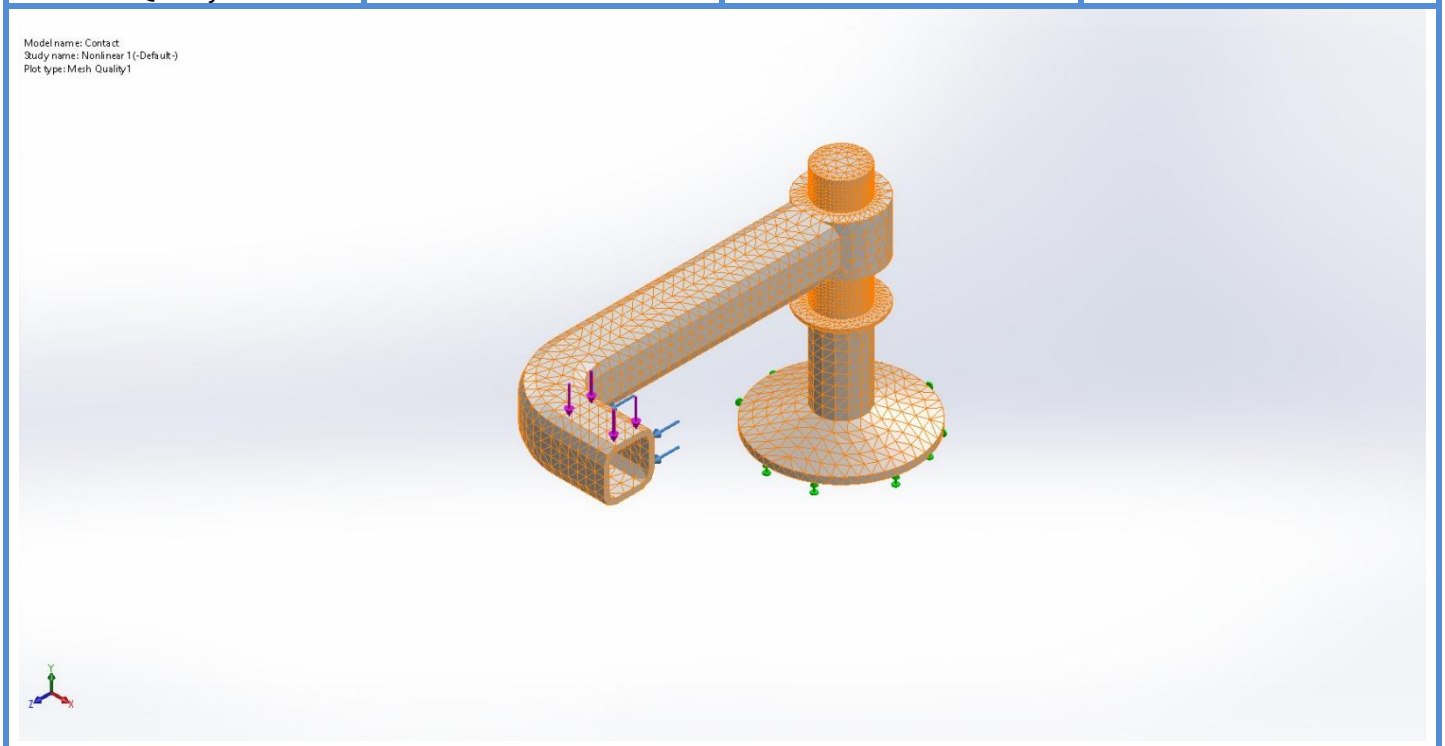

Contact-Nonlinear 1-Quality-Quality1

Sensor Details
No Data

Resultant Forces

Reaction forces

Selection set	Units	Sum X	Sum Y	Sum Z	Resultant
Entire Model	N	383.769	135.727	-116.037	423.279

Reaction Moments

Selection set	Units	Sum X	Sum Y	Sum Z	Resultant
Entire Model	N.m	0	0	0	0

Free body forces

Selection set	Units	Sum X	Sum Y	Sum Z	Resultant
Entire Model	N	0	0	0	0

Free body moments

Selection set	Units	Sum X	Sum Y	Sum Z	Resultant
Entire Model	N.m	0	0	0	0

Beams
No Data

Study Results

Name	Type	Min	Max
Stress1	VON: von Mises Stress at Step No: 100(0.08 Seconds)	4.485e+03N/m^2 Node: 1668	1.700e+07N/m^2 Node: 719

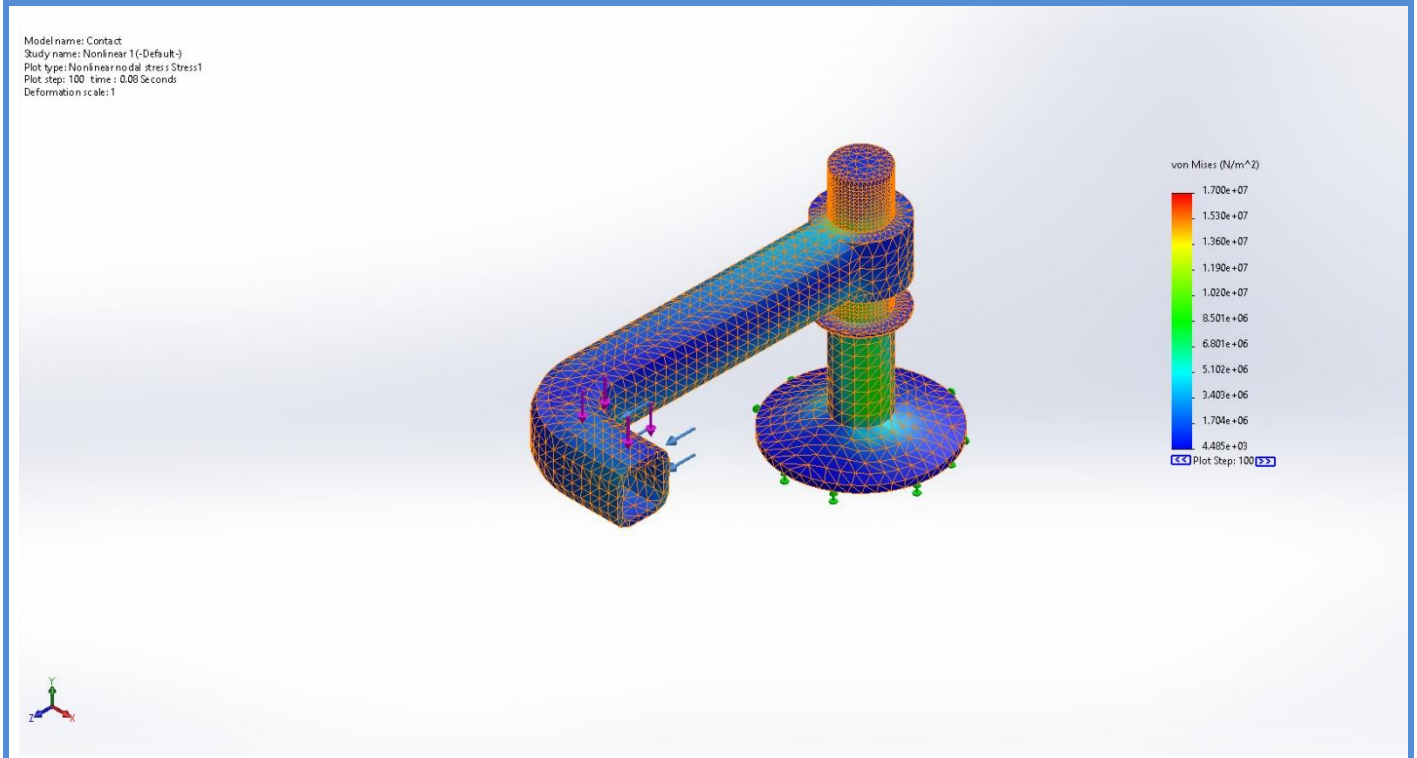

Contact-Nonlinear 1-Stress-Stress1

Name	Type	Min	Max
Displacement1	URES: Resultant Displacement at Step No: 99(0.0792 Seconds)	0.000e+00mm Node: 1479	1.018e+01mm Node: 4471

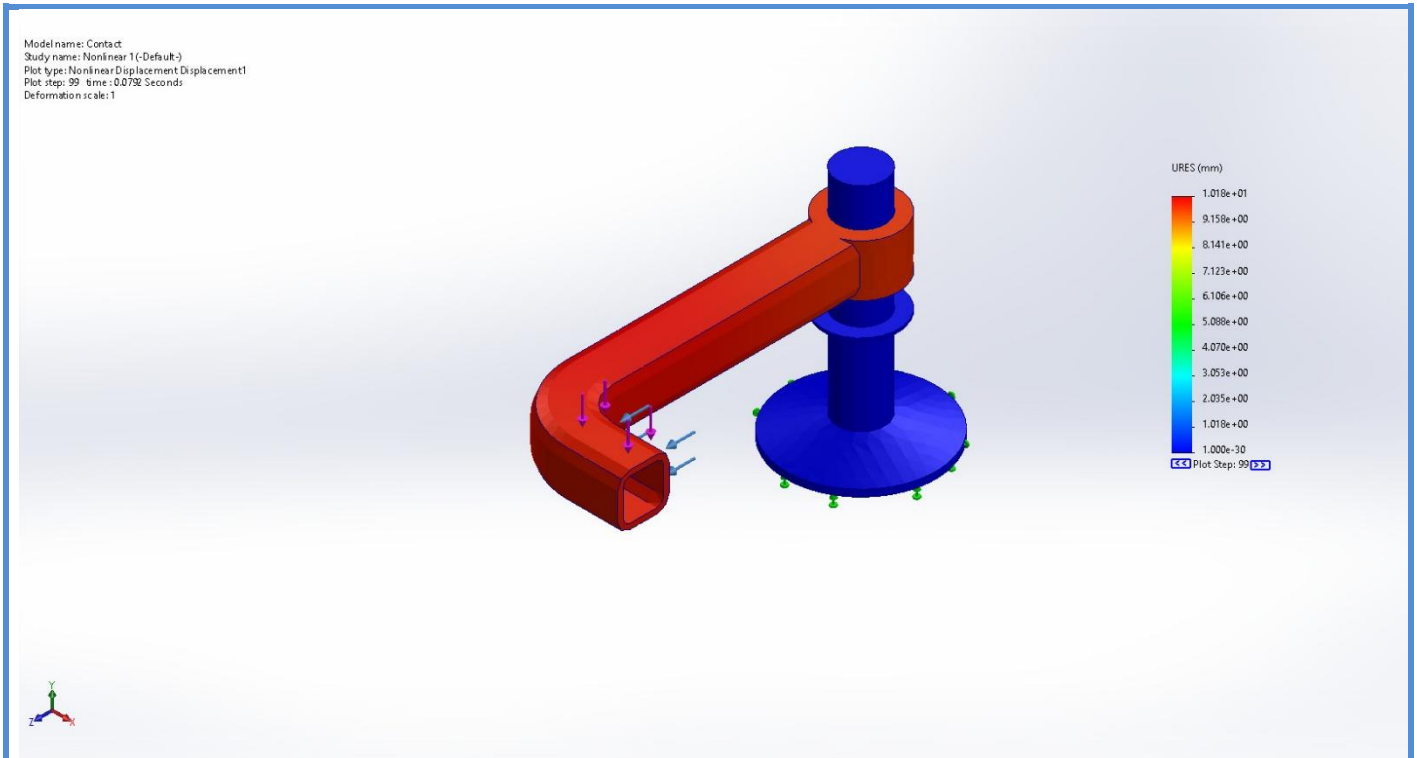

Contact-Nonlinear 1-Displacement-Displacement1

Name	Type	Min	Max
Strain1	ESTRN: Equivalent Strain at Step No: 100(0.08 Seconds)	9.749e-09 Element: 1519	3.671e-03 Element: 15151

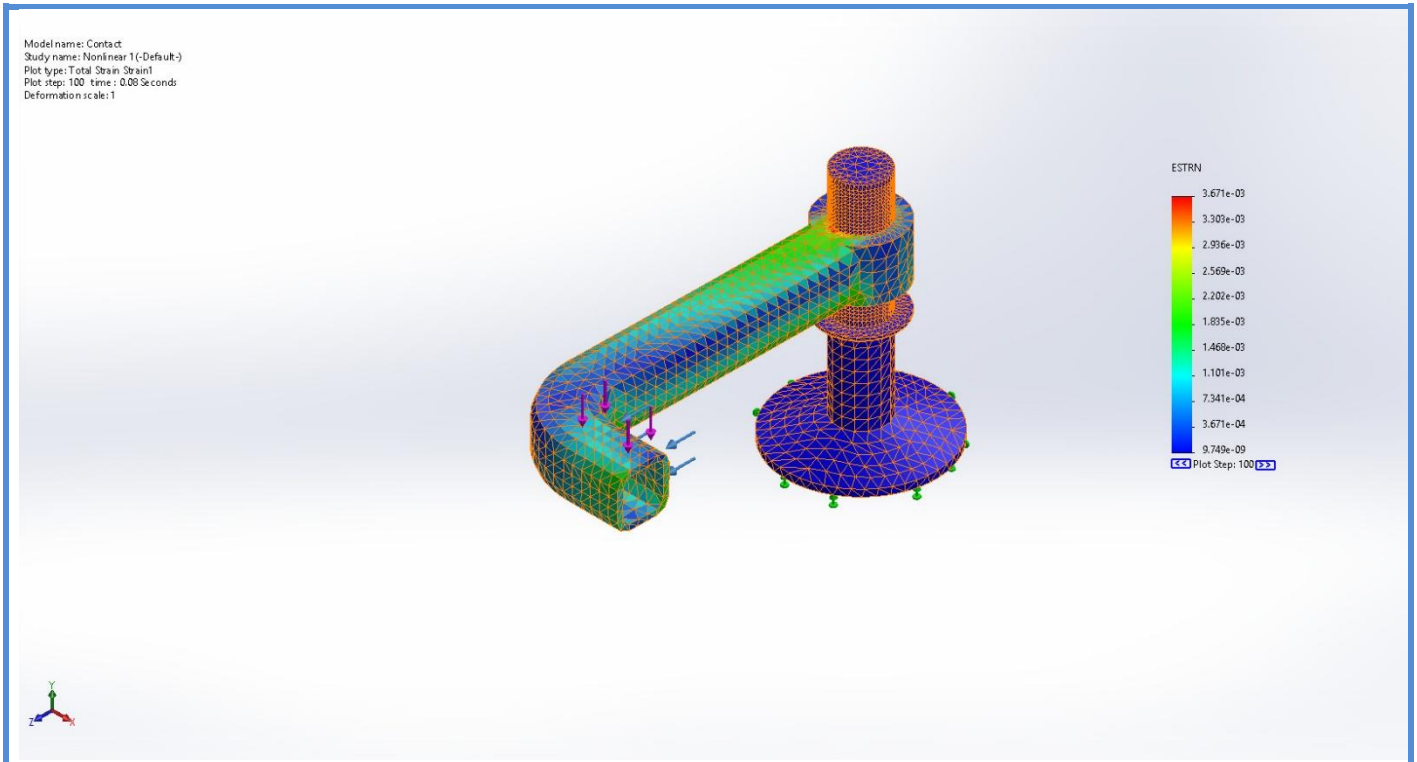

Contact-Nonlinear 1-Strain-Strain1

Name	Type
Response1	Nonlinear Response

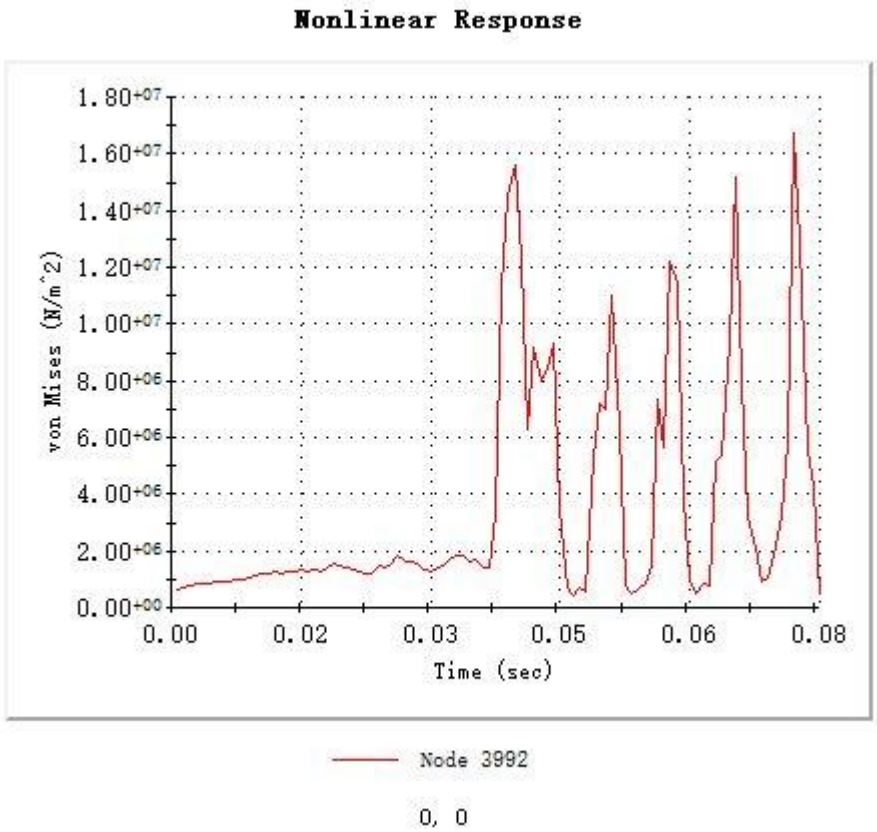

Contact-Nonlinear 1-Response-Response1

Name	Type	Min	Max
Acceleration1	AY: Y Acceleration at Step No: 54(0.0432 Seconds)	-2.277e+06mm/s^2 Node: 3721	4.012e+06mm/s^2 Node: 4229

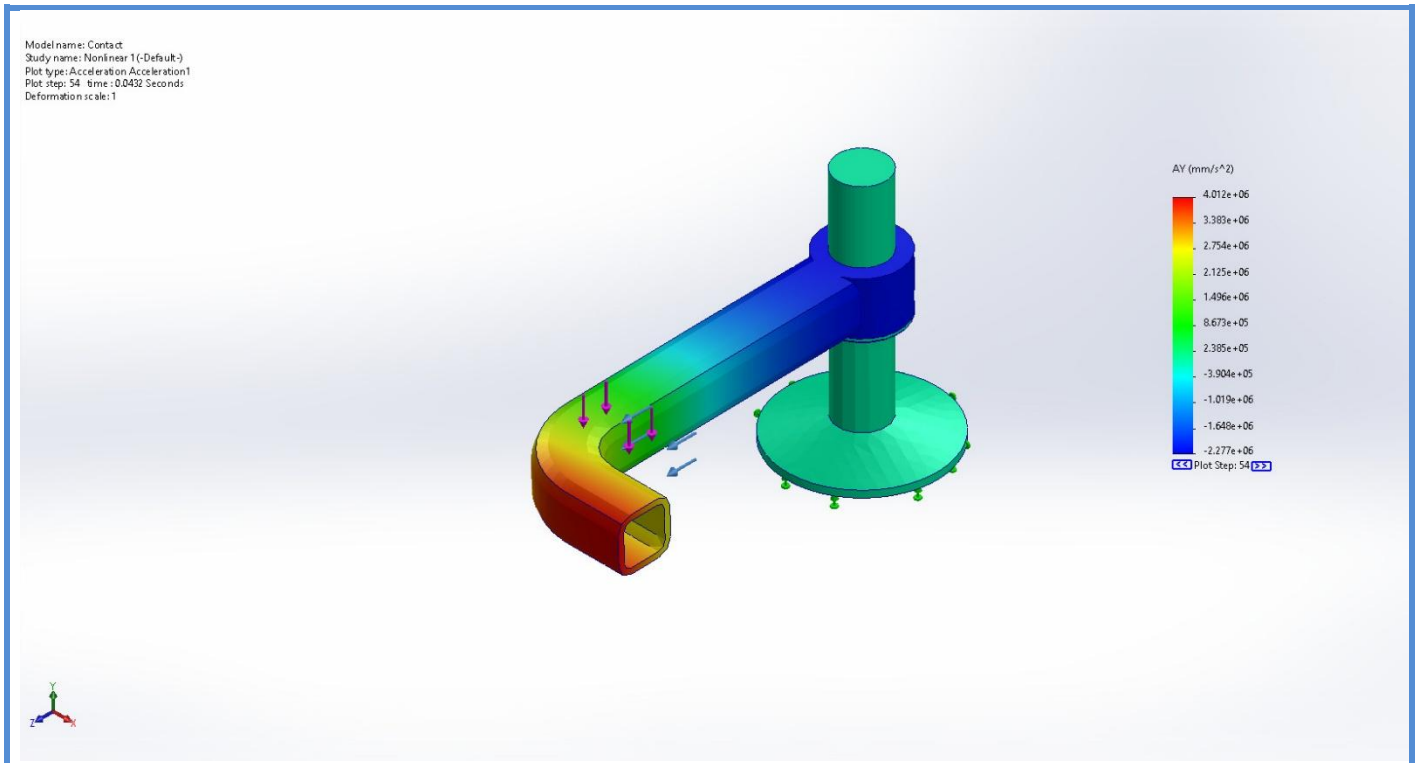

Contact-Nonlinear 1-Acceleration-Acceleration1

Conclusion